STANLEY
Access Technologies

SLIDING MANUAL ENTRANCES: PROCARE™ 8300BP 4-PANEL, BI-PARTING

3.19 - BI-PARTING WITH OPTIONAL SMOKE & DRAFT

- 3.19.01 - BI-PARTING
- 3.19.02 - BI-PARTING WITH SMOKE & DRAFT

© 2018 Stanley Access Technologies, LLC.

DRAWING: 3.19_PC83-BP.DWG

PAGE: 3.19

REVISION: 06/06/2025

STANLEY Access Technologies

PROCARE™ 8300BP SERIES

BI-PARTING TRACKLESS	
PROJECT INFORMATION	
PROJECT NAME:	
LOCATION:	
DOOR NUMBER(S):	
DATE:	SHEET: OF

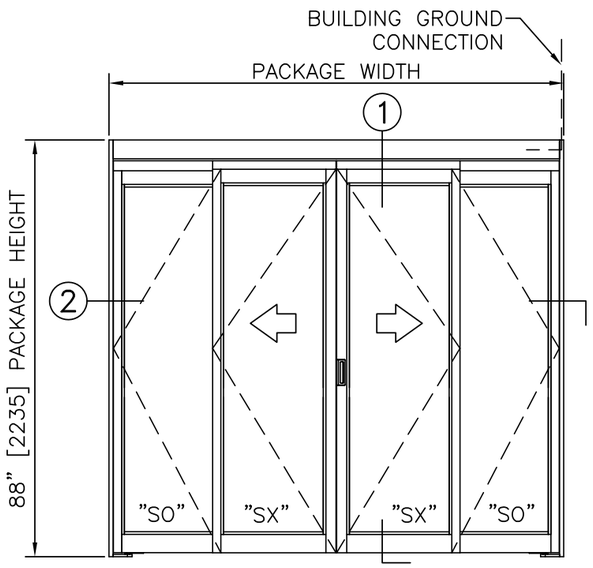

ELEVATION VIEW

SCALE: 3/8" = 1'-0"

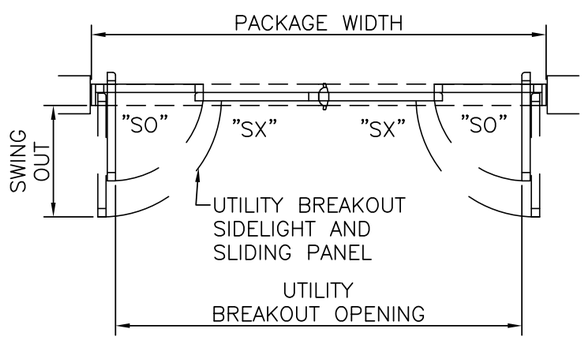

PLAN VIEW

SCALE: 3/8" = 1'-0"

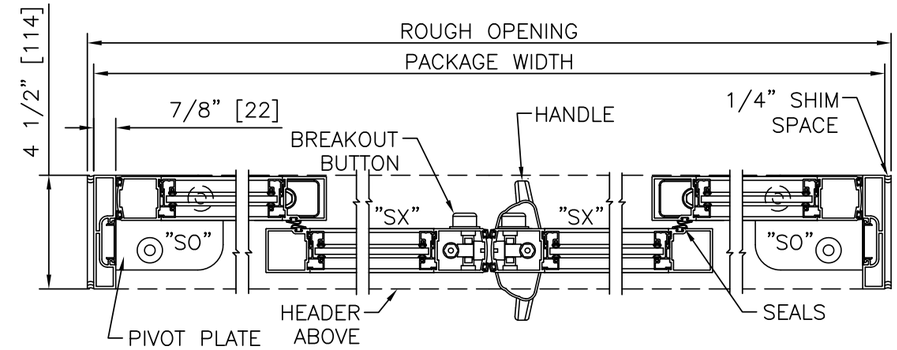

2 HORIZONTAL SECTION

SCALE: 2" = 1'-0"

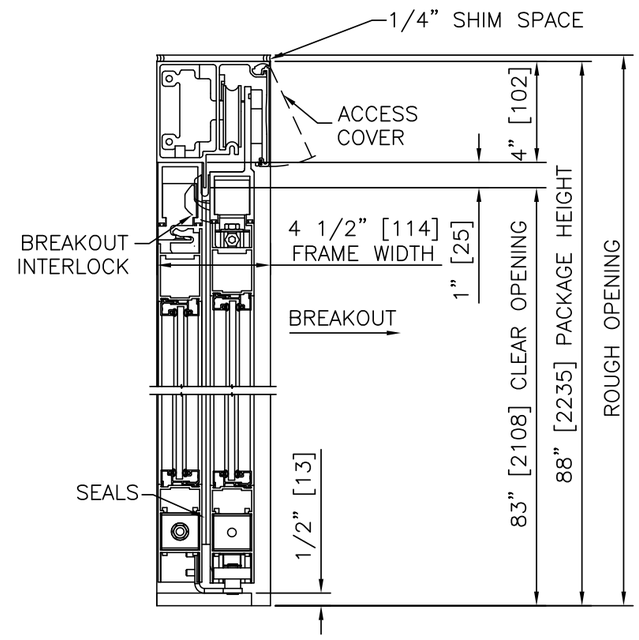

LEFT HAND & RIGHT HAND

1 VERTICAL SECTION

SCALE: 2" = 1'-0"

PRODUCT OPTIONS

FINISH
- ☒ ANODIZED CLEAR CL2
- ☐ CUSTOM

LATCHING/LOCKING
- ☐ POSITIVE LATCH
- ☐ 1-POINT
- ☐ LOCK INDICATOR

BOTTOM RAILS
- ☐ 4" (STD)
- ☐ 6" 8" 10" 12"

MUNTINS
- ☐ 2"
- ☐ 4 1/4"
- ☒ QUANTITY 0 (STD) 1 2

JAMBS
- ☒ 7/8" X 4 1/2" POCKET JAMB (STD)
- ☐ 1 3/4" X 4 1/2" POCKET JAMB

OTHER OPTIONS
- ☐ POSITIVE LATCH (REQUIRED FOR UL1784)
- ☐ SMOKE & DRAFT SEALS (REQ'D FOR UL1784)
- ☐ BOTTOM SWEEPS
- ☐ SELF CLOSER
- ☐ ANTI-MICROBIAL COATING (TOUCH POINTS)

BI-PARTING FORMULAS (7/8" JAMBS)

PACKAGE WIDTH = 2 X CLEAR DOOR OPENING + 13.8"[349]
CLEAR DOOR OPENING = 1/2 PACKAGE WIDTH - 6.9"[175]
UTILITY BREAKOUT WIDTH = PACKAGE WIDTH - 10.3"[260]
SX DOOR PANEL WIDTH = 1/4 PACKAGE WIDTH + 2.1"[52]
SO DOOR PANEL WIDTH = 1/4 PACKAGE WIDTH - 0.8"[21]
SWING OUT WIDTH = SX PANEL WIDTH - 2.4"[60]

BI-PARTING FORMULAS (1 3/4" JAMBS)

PACKAGE WIDTH = 2 X CLEAR DOOR OPENING + 15.5"[394]
CLEAR DOOR OPENING = 1/2 PACKAGE WIDTH - 7.8"[197]
UTILITY BREAKOUT WIDTH = PACKAGE WIDTH - 12.0"[305]
SX DOOR PANEL WIDTH = 1/4 PACKAGE WIDTH + 1.6"[41]
SO DOOR PANEL WIDTH = 1/4 PACKAGE WIDTH - 1.3"[32]
SWING OUT WIDTH = SX PANEL WIDTH - 2.4"[60]

TYPICAL PACKAGE DIMENSIONS (7/8" JAMBS)

PACKAGE WIDTH	NOMINAL CLEAR DOOR OPENING	SLIDING PANEL NOMINAL WIDTH	SIDELIGHT PANEL NOMINAL WIDTH	UTILITY BREAKOUT NOMINAL WIDTH	SWING OUT NOMINAL WIDTH
84" [2134]	35.1" [892]	23.1" [586]	20.2" [513]	73.8" [1873]	20.7" [525]
96" [2438]	41.1" [1045]	26.1" [662]	23.2" [589]	85.8" [2178]	23.7" [602]
120" [3048]	53.1" [1349]	32.1" [814]	29.2" [741]	109.8" [2788]	29.7" [754]
144" [3658]	65.1" [1654]	38.1" [967]	35.2" [894]	133.8" [3397]	35.7" [906]

NOTES
1. CONNECTION TO BUILDING GROUND BY ELECTRICAL CONTRACTOR.
2. ROUGH OPENING SHALL PROVIDE 1/4"[6] SHIM SPACE ON SIDES AND TOP OF PACKAGE.
3. STANDARD PACKAGE EXCLUDES LATCHING OR LOCKING. POSITIVE LATCHING AND LOCKING SYSTEMS AVAILABLE; POSITIVE LATCHING INCLUDED ON LEAKAGE RATED ASSEMBLIES.
4. STANDARD GLAZING STOPS FOR ALL PANELS ARE 1/4"[6]; 1/2"[13], 5/8"[16], AND 1"[25] AVAILABLE.
5. STANDARD STILES, AND BOTTOM RAILS SHOWN; BOTTOM RAILS TO 12"[305]; 2"[51] AND 4 1/4"[108] MUNTINS AVAILABLE.
6. SEE SPECIFICATIONS FOR ADDITIONAL INFORMATION.

BI-PARTING TRACKLESS

PROCARE™ 8300BP SERIES

STANLEY Access Technologies

STANLEY Access Technologies	PROCARE™ 8300BP SERIES	BI-PARTING TRACKLESS
		PROJECT INFORMATION
		PROJECT NAME:
		LOCATION:
		DOOR NUMBER(S):
		DATE: SHEET: OF

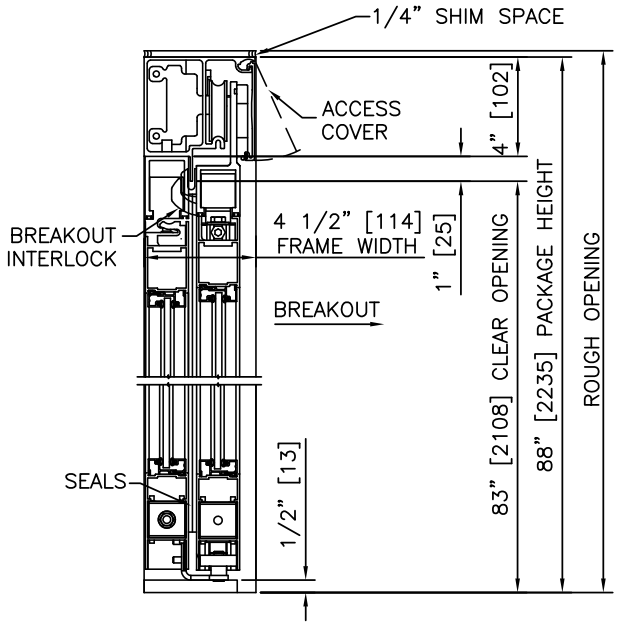

1 VERTICAL SECTION

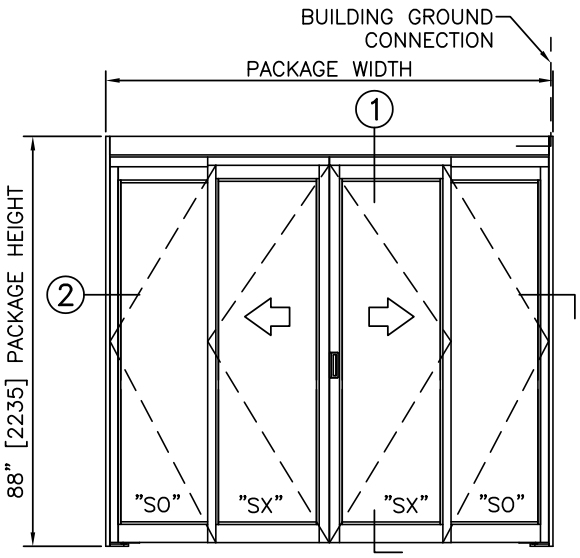

ELEVATION

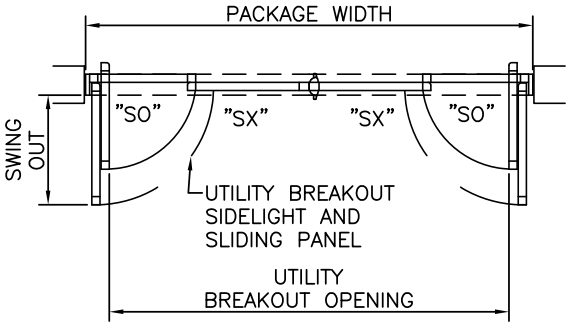

PLAN

NOTES
1. CONNECTION TO BUILDING GROUND BY ELECTRICAL CONTRACTOR.
2. ROUGH OPENING SHALL PROVIDE 1/4"[6] SHIM SPACE ON SIDES AND TOP OF PACKAGE.
3. STANDARD PACKAGE EXCLUDES LATCHING OR LOCKING. POSITIVE LATCHING AND LOCKING SYSTEMS AVAILABLE; POSITIVE LATCHING INCLUDED ON LEAKAGE RATED ASSEMBLIES.
4. SEE SPECIFICATIONS FOR ADDITIONAL INFORMATION.

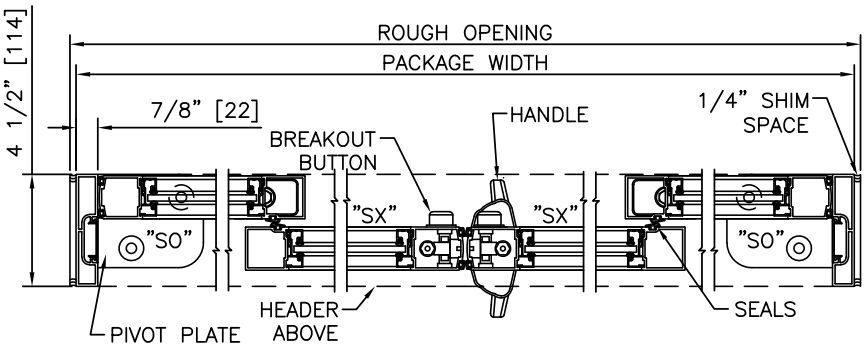

2 HORIZONTAL SECTION

TYPICAL PACKAGE DIMENSIONS (7/8" JAMBS)					
PACKAGE WIDTH	NOMINAL CLEAR DOOR OPENING	SLIDING PANEL NOMINAL WIDTH	SIDELIGHT PANEL NOMINAL WIDTH	UTILITY BREAKOUT NOMINAL WIDTH	SWING OUT NOMINAL WIDTH
84" [2134]	35.1" [892]	23.1" [586]	20.2" [513]	73.8" [1873]	20.7" [525]
96" [2438]	41.1" [1045]	26.1" [662]	23.2" [589]	85.8" [2178]	23.7" [602]
120" [3048]	53.1" [1349]	32.1" [814]	29.2" [741]	109.8" [2788]	29.7" [754]
144" [3658]	65.1" [1654]	38.1" [967]	35.2" [894]	133.8" [3397]	35.7" [906]

STANLEY Access Technologies	PROCARE™ 8300BP SERIES	BI-PARTING TRACKLESS, SMOKE & DRAFT
		PROJECT INFORMATION
		PROJECT NAME:
		LOCATION:
		DOOR NUMBER(S):
		DATE: SHEET: OF

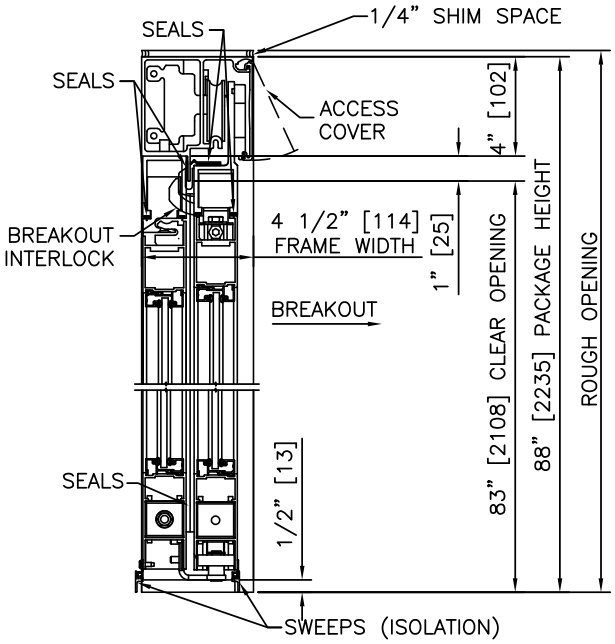

1 VERTICAL SECTION

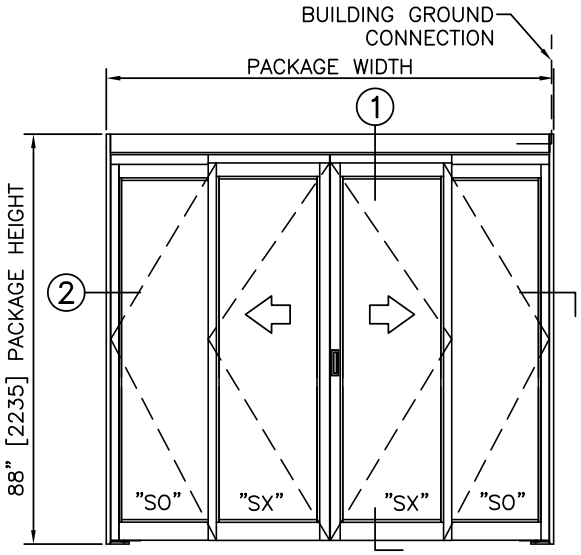

ELEVATION

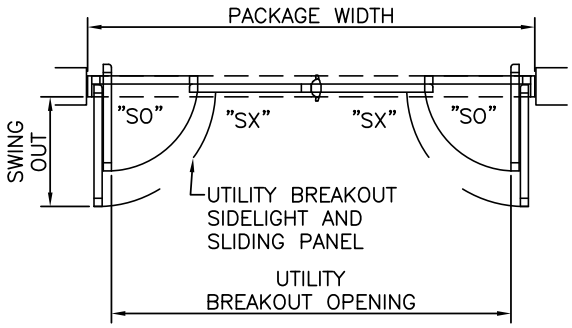

PLAN

NOTES
1. CONNECTION TO BUILDING GROUND BY ELECTRICAL CONTRACTOR.
2. ROUGH OPENING SHALL PROVIDE 1/4"[6] SHIM SPACE ON SIDES AND TOP OF PACKAGE.
3. STANDARD PACKAGE INCLUDES POSITIVE LATCHING. LOCKING SYSTEMS AVAILABLE
4. PRODUCT IS CERTIFIED AS AN EFFECTIVE BARRIER AGAINST THE PASSAGE OF SMOKE IN ACCORDANCE WITH UL1784.
5. SEE SPECIFICATIONS FOR ADDITIONAL INFORMATION.

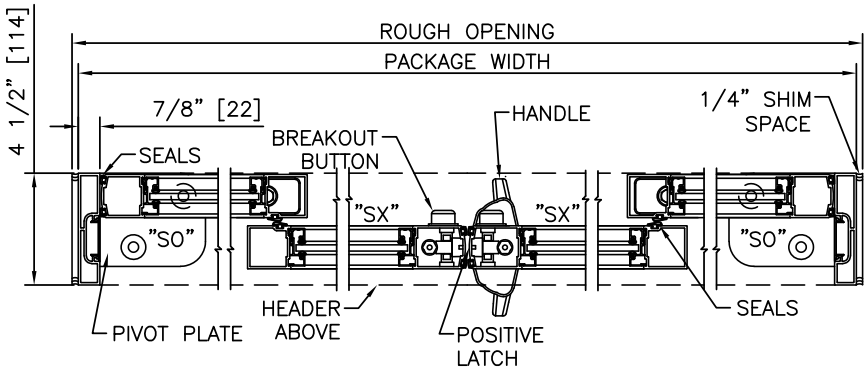

2 HORIZONTAL SECTION

TYPICAL PACKAGE DIMENSIONS (7/8" JAMBS)					
PACKAGE WIDTH	NOMINAL CLEAR DOOR OPENING	SLIDING PANEL NOMINAL WIDTH	SIDELIGHT PANEL NOMINAL WIDTH	UTILITY BREAKOUT NOMINAL WIDTH	SWING OUT NOMINAL WIDTH
84" [2134]	35.1" [892]	23.1" [586]	20.2" [513]	73.8" [1873]	20.7" [525]
96" [2438]	41.1" [1045]	26.1" [662]	23.2" [589]	85.8" [2178]	23.7" [602]
120" [3048]	53.1" [1349]	32.1" [814]	29.2" [741]	109.8" [2788]	29.7" [754]
144" [3658]	65.1" [1654]	38.1" [967]	35.2" [894]	133.8" [3397]	35.7" [906]